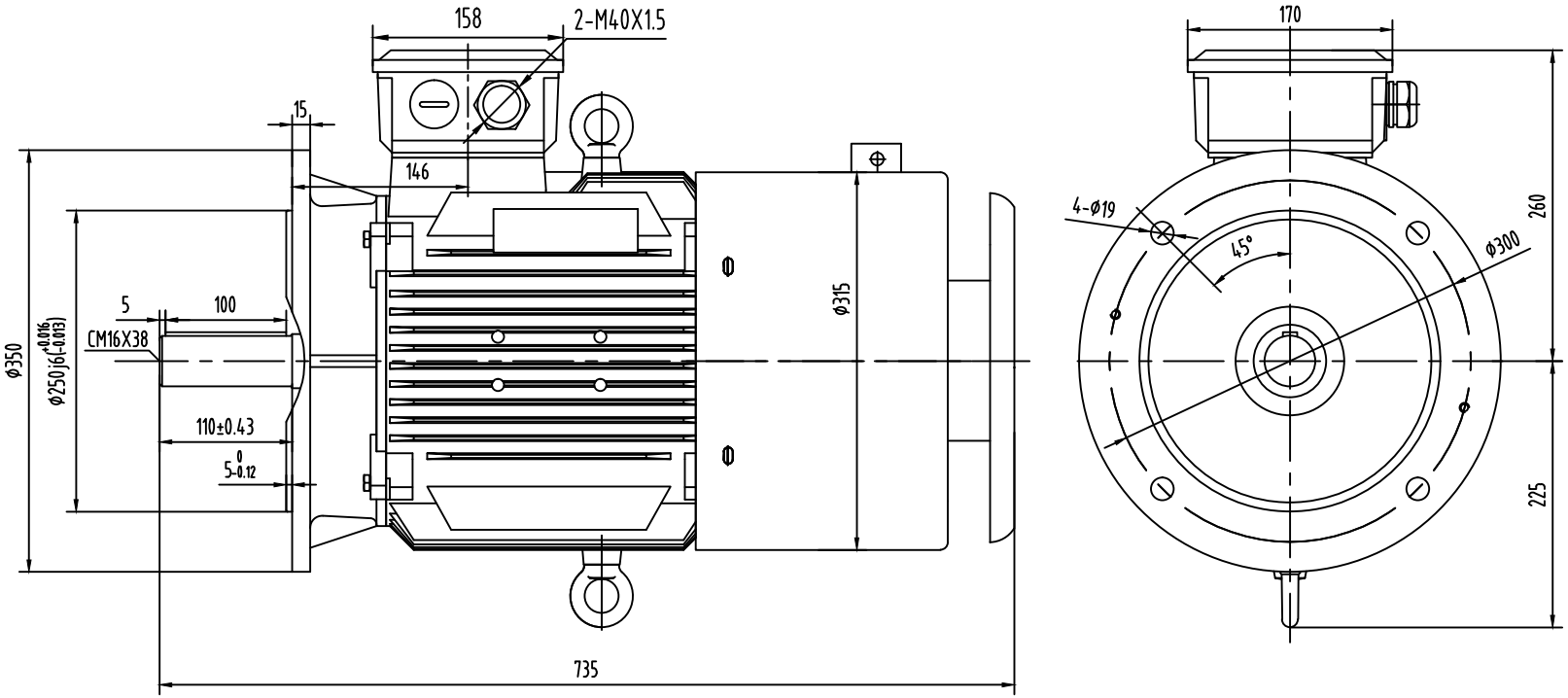

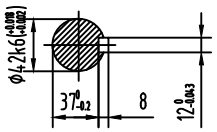

								OUTLINE
Mark	No.	Zone	File changing No.	Signature	Date			OMV0-160M0-04~08P V1
Design			Standard			Sign	Weight	Scale
Check								1:4
Auditing								Wuxi OMEC LTD.
Technics			Approval			Total page	page No.	